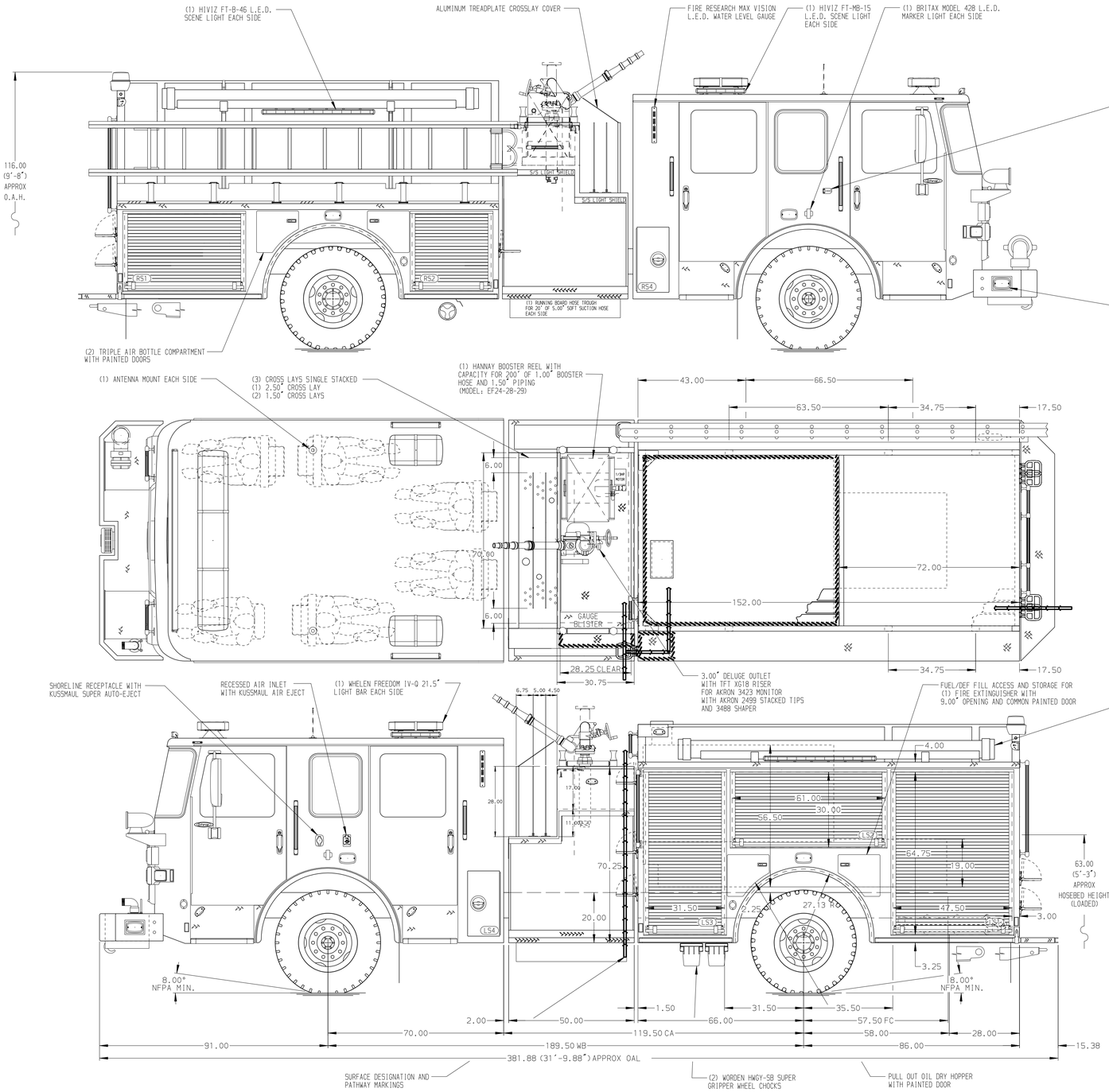

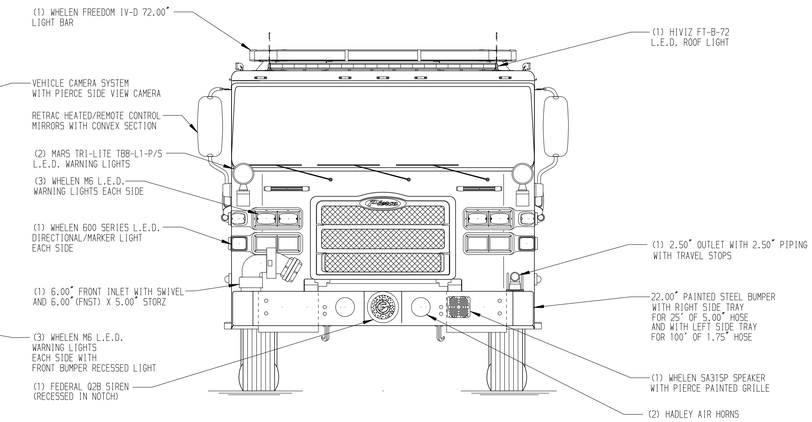

HOSEBED CAPACITIES

1. 500' OF 3.00" D.J. POLY HOSE
2. 200' OF 2.50" D.J. POLY HOSE
3. 1000' OF 5.00" D.J. POLY HOSE
4. 500' OF 3.00" D.J. POLY HOSE
5. 200' OF 1.75" D.J. POLY HOSE

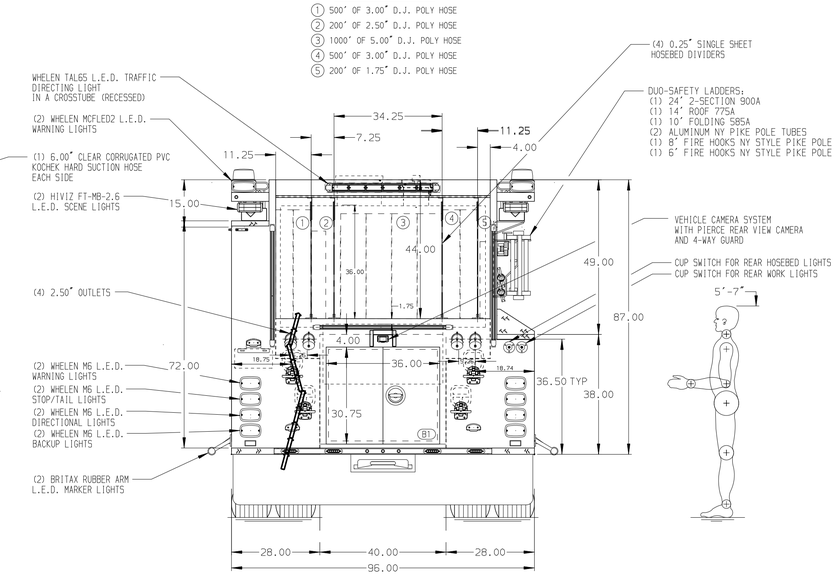

ALUMINUM BODY

MAXIMUM O.A.H. 116"

NOTE

DIMENSIONS SHOWN ARE APPROXIMATE AND ARE SUBJECT TO MINOR DEVIATIONS AS MAY OCCUR OR BE NECESSARY IN CONSTRUCTION.
MINOR DETAILS NOT SHOWN.

1. ONSPOT AUTOMATIC TIRE CHAINS TO BE PROVIDED AT REAR
2. BATTERY CHARGER LOCATED BEHIND DRIVER SEAT
3. BATTERY CHARGER INDICATOR LOCATED ON DRIVER'S SEAT RISER
4. L.E.D. LIGHT STRIP LOCATED ON THE FRONT OF THE HOSEBED
5. SIX DRIP PAN GUARDS FOR ROLL-UP DOOR LOCATED PER SHOP ORDER
6. SIX FULL WIDTH/DEPTH ADJUSTABLE SHELVES IN COMPARTMENTS PER SHOP ORDER
7. TWO FULL WIDTH/DEPTH FLOOR MOUNTED SLIDE-OUT TRAYS WITH SIDE SLIDES IN COMPARTMENTS PER SHOP ORDER
8. ALUMINUM TREADPLATE ON THE FLOOR OF COMPARTMENT PER SHOP ORDER
9. THREE PAC TRACS ON BACK WALL OF COMPARTMENT PER SHOP ORDER
10. FIVE NEMA DUPLEX RECEPTACLES LOCATED PER SHOP ORDER
11. TWO VERTICLE PARTITIONS IN REAR COMPARTMENT LOCATED PER SHOP ORDER
12. LITTLE GIANT VELOCITY LADDER - MODEL 13 ON THE FLOOR IN COMPARTMENT LS1

REV	DATE	BY	CH
B	17OCT22	ARI	-
A	02SEP22	JWO	PHA

CHASSIS DATA	
MAKE	PIERCE
MODEL	ENFORCER
TITLE	2000-D-1000P,1000G WATER,152" FDLER BODY (3) CROSSLAYS,RS ADJUSTABLE LADDER BRACKET,DELUGE
FOR	NORTH BRANCH FIRE COMPANY - BRANCHBURG 1077 US HIGHWAY 202 NORTH, BRANCHBURG, NJ 08876 USA
DWG NO.	37602AD

Pierce MANUFACTURING INC.

JOB NO.	37602
SCALE	1:24
DATE	
DRAWN BY	ARI
DATE	15AUG22
CHECKED BY	PHA
DATE	30AUG22
SHEET SIZE	D
SHEET NO.	1 OF 1